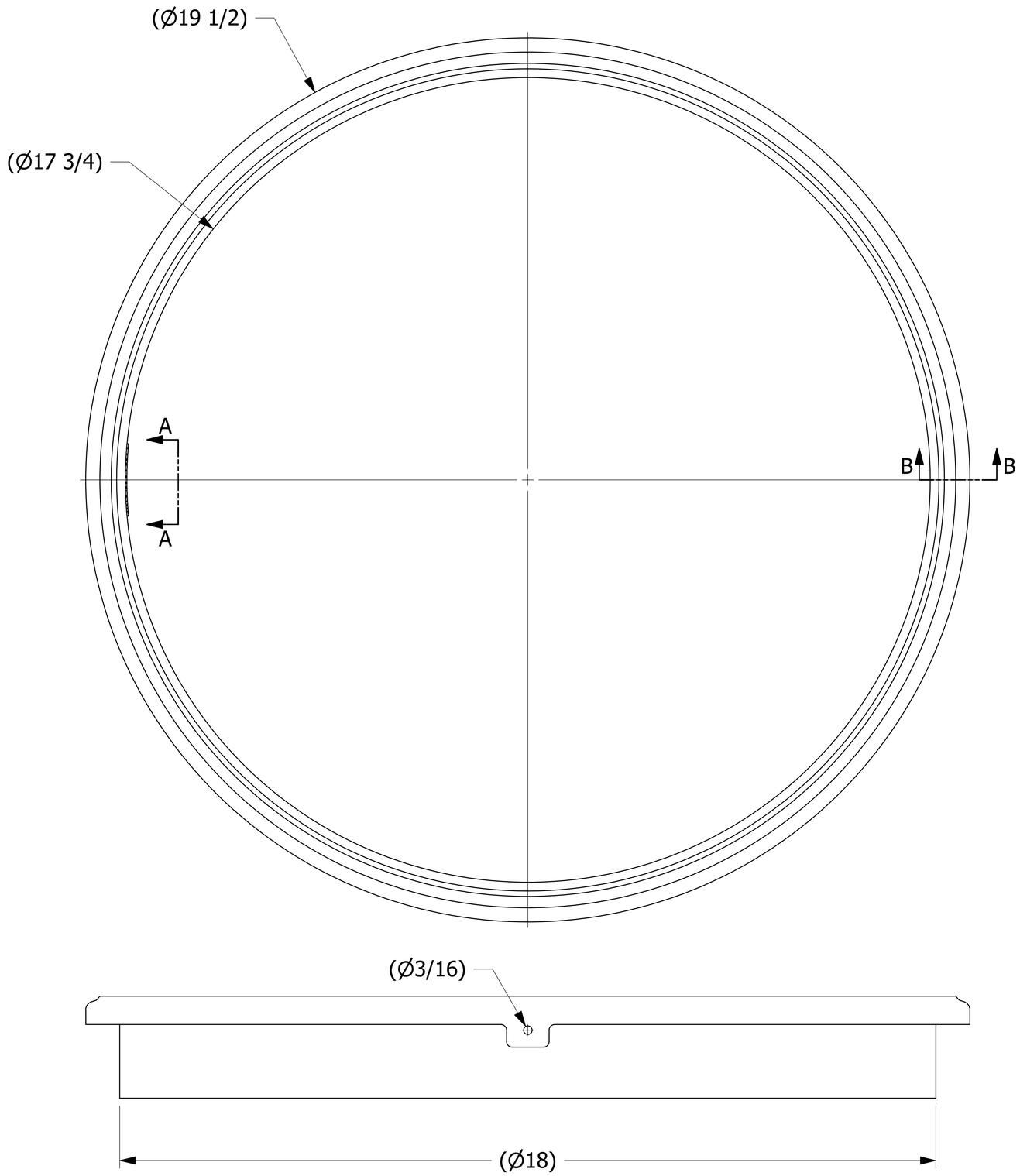

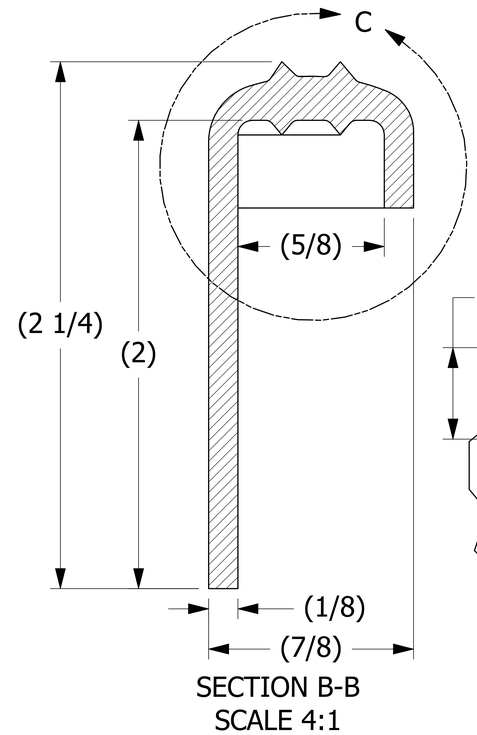

SECTION B-B
SCALE 4:1

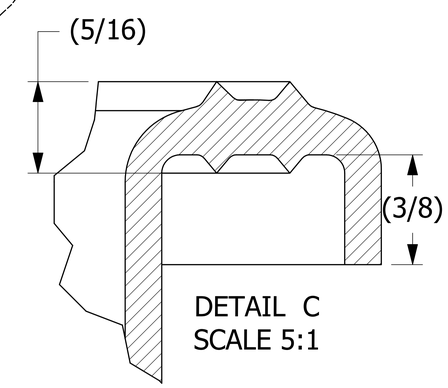

DETAIL C
SCALE 5:1

SALCO PRODUCTS
PART# TC18NGE
MATERIAL: EPDM
PATENTS:
WWW.SALCOPRODUCTS.COM/LEGAL

SECTION A-A
SCALE 3:1

SALES DRAWING SALES DRAWING

SALES DRAWING SALES DRAWING

REV	BY	DATE	DESCRIPTION
N	CHL	1-23-18	DURO WAS 75±5
M	WEB	12-10-15	UPDATED PATENT INFO & TITLEBLOCK
L	REH	11-23-10	ADDED PATENT PENDING NOTE
K	CHL	1-5-10	ADDED TOLERANCE TO 80° DIM
J	AJB	11-12-09	REVISED CHEVRON ANGLE TOLERANCE.
I	CHL	9-10-09	ADDED CHEVRONS TO UNDERSIDE OF GASKET
H	BRG	12-14-07	REMOVED CHART

UNLESS OTHERWISE SPECIFIED
DIMENSIONAL TOLERANCES
FRACTIONAL: ±1/16
X.XX: ±.03
X.XXX: ±.015
ANGULAR: ±1°
DEBURR ALL SHARP EDGES.
ALL MACHINED SURFACES TO HAVE A 125 RMS FINISH UNLESS NOTED OTHERWISE.
THIRD ANGLE PROJECTION

DRAWN BY:	CLH
CHECKED BY:	MR
PROTOTYPE BY:	CLH
PROTOTYPE DATE:	1/15/1997
APPROVED FOR PRODUCTION BY:	CLH
PRODUCTION DATE:	1/15/1997

SALCO PRODUCTS, INC.

PART NAME: NOZZLE GASKET 18"

MATERIAL: BLACK EPDM RUBBER DURO 80±5 SHORE A

PROJECT #: 961102 | SHEET #: 1 OF 1 | SCALE: 1:1

DRAWING #: E24483 | PART #: TC18NGE

THIS PRINT, PROPERTY OF SALCO PRODUCTS INC, CONTAINS PROPRIETARY INFORMATION AND MUST NOT BE COPIED, REPRODUCED, OR USED DETRIMENTALLY TO OUR INTEREST.